Model No. UT1200 POWER MIXER

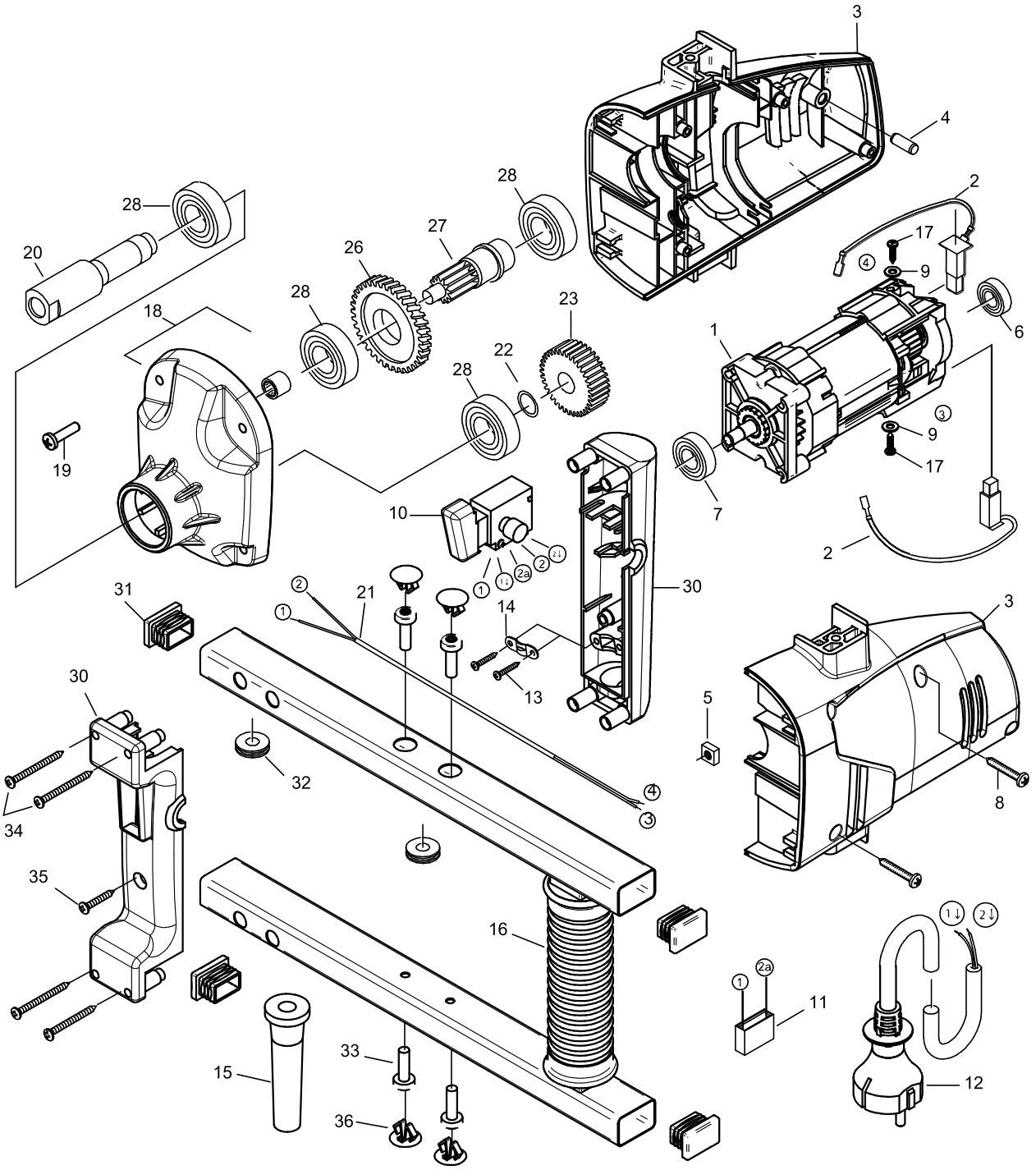

Model No. UT1200 POWER MIXER

Item	Parts No.	Description	I/C	Qty	N/O	Opt. 1	Opt. 2	Note
001	EE7701C100	MOTOR		1				
002	EE80700032	PAIR OF BRUSHES		2				
003	EE80900408	MOTOR HOUSING		1				
004	EE80901055	SILICONE PLUG		2				
005	EE80201031	SQUARE		4				
006	EE80410025	GROOVED BALL BEARING		1				
007	EE80410026	GROOVED BALL BEARING		1				
008	EE80201229	SELF TAPPING SCREW		4				
009	EE80201371	DISC		2				
010	EE80600510	SWITCH		1				
011	EE80500008	ANTI PARASITE CONDENSER		1				
012	EE80600060	CONNECTING CABLE		1				
013	EE80201270	SELF TAPPING SCREW		2				
014	EE85000020	WIRE LOCKING FLANGE		1				
015	EE83000004	CABLE GROMMET		1				
016	EE77M01590	BOW HANDLE		1				
017	EE80201251	SELF TAPPING SCREW		2				
018	EE77M01400	GEARBOX HOUSING		1				
019	EE80201204	LENS HEAD SCREW		4				
020	EE77011420	WORK SPINDLE		1				
021	EE77M01186	INTERCONNECTING WIRE		1				
022	EE80200504	FITTING WASHER		1				
023	EE77018430	SPINDLE WHEEL		1				
026	EE7701C471	INTERMEDIATE WHEEL		1				
027	EE77011500	SHAFT		1				
028	EE80410043	GROOVED BALL BEARING		4				
030	EE80900098	PAIR OF HANDLE HALVES		1				
031	EE80900000	COVER CAP		4				
032	EE83000051	CABLE GROMMET		2				
033	EE80201525	SCREW		4				
034	EE80201267	SELF TAPPING SCREW		4				
035	EE80201280	SELF TAPPING SCREW		1				
036	EE80900201	PLUG		4				

Please order the parts with a part number.

Print Date 20/05/2015