BRAD NAILER ESSVE BN 1,2/55 G3

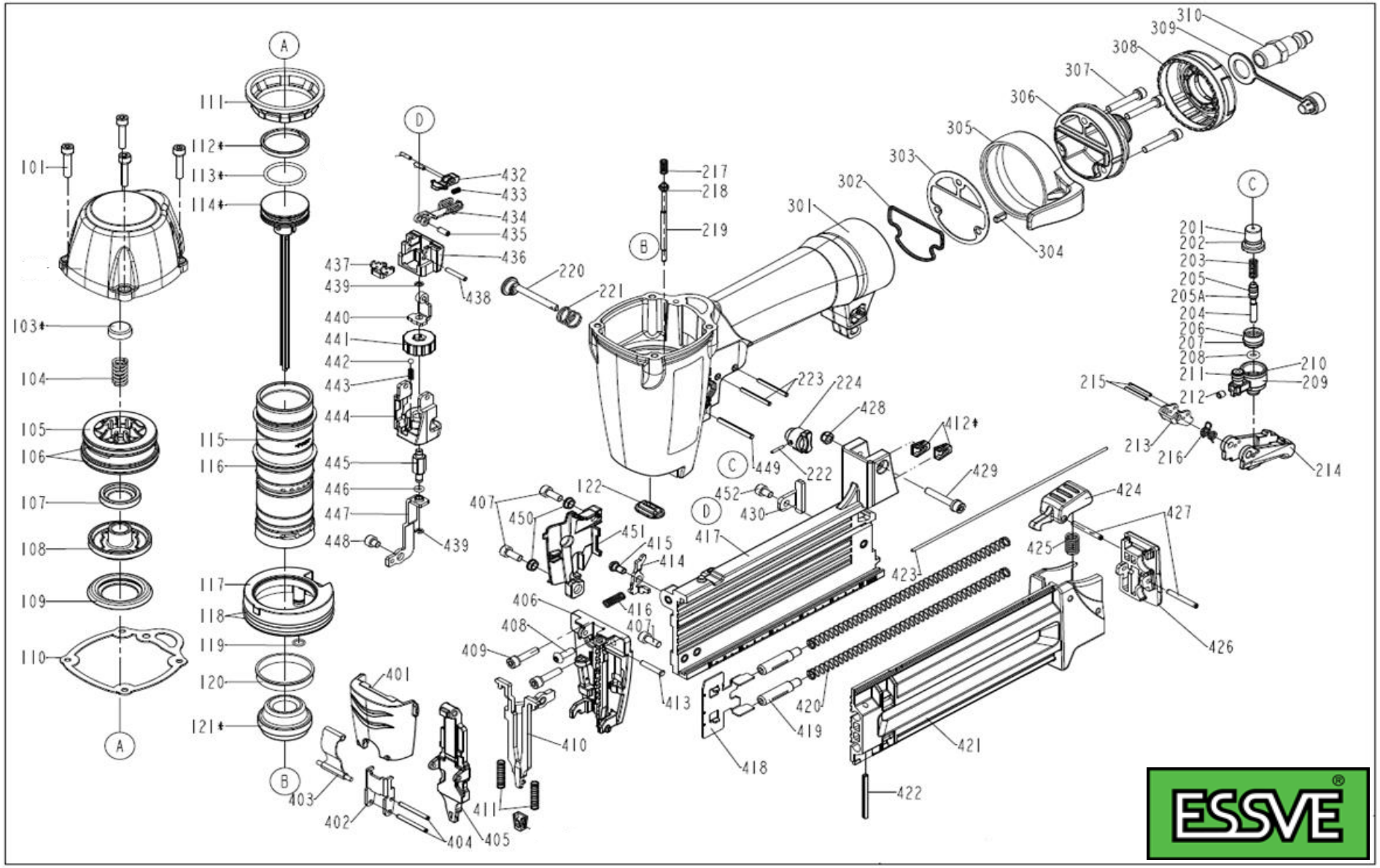

BRAD NAILER ESSVE BN 1,2/55 G3 SMART POINT

Pos	Art. Nr.	Name	Pos	Art. Nr.	Name	Pos	Art. Nr.	Name
101	10002971	BOLT ASSY	413	10002900	FIXED PIN	224	10002925	HINGE POINT
			414	10002935	SAFETY STOPPER	302	10002902	GASKET
103	10002938	SEAL	415	10002891	SCREW	303	10002949	GASKET
104	10000915	COMPRESSION SPRING	416	10002912	SPRING	304	10002924	RUBBER PAD
105	10002960	COLLAR	417	10002880	MAGAZINE A	305	10002908	BELT HOOK
106	10002990	O - RING	418	10002930	PUSHER	306	10002916	END CAP
107	10002892	OIL SEAL	419	10000951	SHAFT	307	10002972	BOLT ASSY
108	10000931	HD.VALVE PISTON	420	10002932	PUSHER SPRING	308	10002956	GUIDE PLATE
109	10002936	SEAL	421	10002955	MAGAZINE B	310	10002926	AIR PLUG
110	10002903	PACKING	422	10001048	SPRING PIN	401	10002958	GUIDE COVER
111	10002961	COLLAR	423	10000949	FLAT BAR	402	10002927	LOCK HANDLE
112	10002920	PISTON RING	424	10002914	LATCH	403	10002875	LATCH UNIT
113	10002993	O - RING	425	10002885	LOCK.SPRING	434	10002889	SECONDARY TRIGGER
114	10002869	DRIVER UNIT	426	10002952	PROTECTING HOOD COVER	435	10002984	PIN
115	10002896	CYLINDER	427	10002983	SPIRAL PINS	436	10002894	SAFETY SPRING BASE
116	10002994	O - RING	428	10001055	LOCK NUT	437	10002906	SAFETY DRIVER GUIDE
117	10002897	CYLINDER SPACER	429	10002968	BOLT W/FLAT WASHER	438	10002979	SPRING PIN
118	10002991	O - RING	430	10002913	STOPPER	439	10001032	E - RING
119	10002995	O - RING				440	10002904	SAFETY
120	10000858	CYLINDER RING	432	10002967	STOPPER	441	10000983	ADJUST AXIE
121	10002901	BUMPER	433	10002890	SPRING	442	10001060	STEEL BALL
122	10000832	WASHER, DRIVER GUIDE	207	10002988	O - RING	443	10000852	POSITIONING SPRING
201	10002939	TRIGGER VALVE HEAD	208	10002986	O - RING	444	10002907	SAFETY GUIDE
202	10002987	O - RING	209	10002940	PLUNGER CAP	445	10000982	ADJUST ROD A
203	10002911	SPRING	210	10002989	O - RING	446	10001358	O - RING
204	10002942	TRIGGER VALVE STEM B	211	10001063	O - RING	447	10002878	SAFETY B UNIT
205	10001061	O - RING	212	10001313	HEX.SOC.HD.SCREW	448	10001001	HEX.SOC.HD.BOLT
205A	10001062	O - RING	213	10002909	STOPPER	449	10001047	SPRING PIN
206	10002910	VALVE PLUNGER	214	10002888	TRIGGER	450	10002959	LATCH SPRING BUSHING
404	10002982	SPIRAL PINS	215	10002977	SPRING PIN	451	10002945	COVER-SAFETY
405	10002922	DRIVER GUIDE COVER	216	10002887	SPRING	452	10001002	HEX.SOC.HD.BOLT
406	10002884	DRIVER GUIDE	217	10002947	SPRING			
407	10001007	HEX.SOC.HD.BOLT	218	10002992	O - RING		**Extras:**	
408	10001018	HALF ROUND HD.HEX.BOLT	219	10002941	TRIGGER VALVE STEM		10003370	No mark set (3x412)
409	10002970	BOLT ASSY	220	10002871	LOCATING WHEEL UNIT			
410	10002877	SAFETY A UNIT	221	10002919	SPRING			
411	10002946	SPRING	222	10002976	SPRING PIN			
			223	10002981	SPRING PIN			